Mira Select EV

Exposed valve with adjustable fittings, chrome finish.

1.1592.005

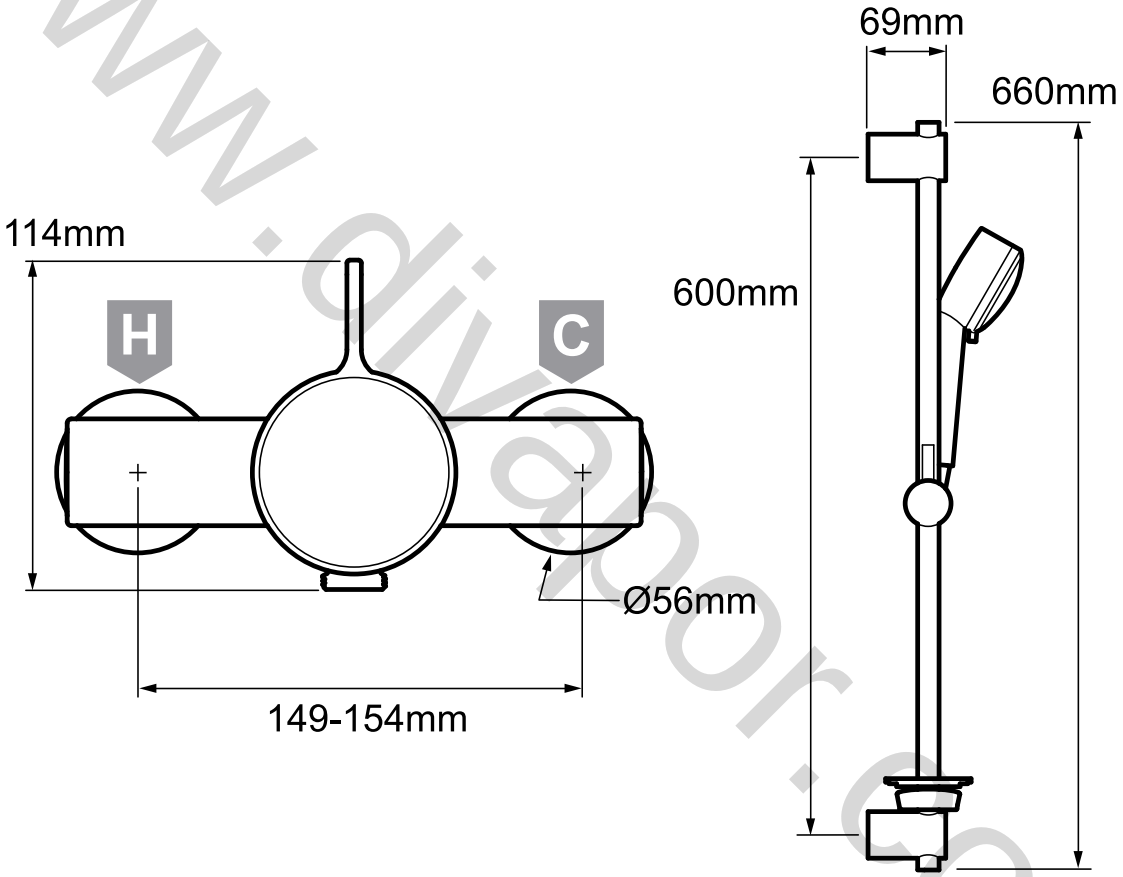

www.divanor.com

To download other resources, and for more information and advice on our products just visit:
www.mirashowers.co.uk