Article Number A7023

CONNECT AIR
One-hole High spout Basin mixer, slim

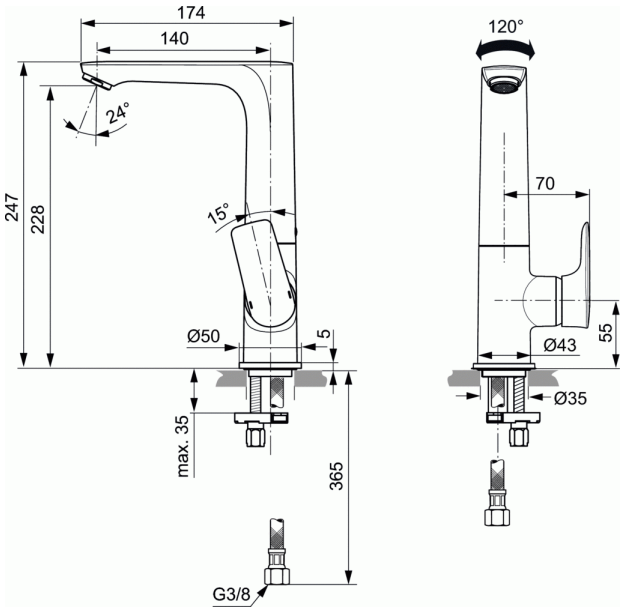

One-hole High spout Basin mixer, slim
Brass cast slim body
Metal handle with red and blue colour indication - printed on handle
Swiveling square cast spout 120°
Aerator Perlator M24x1 with 5 l/min flow rate limiter
28 mm cartridge
Hot water limiter- separate in pack
Flexible hoses PEX G3/8”
Easy-Fix fixation with centering & sealing ring
Noise class 1
Finishes:
- technology electroplating (AA)
- technology PVD (GN, A2, A5) - available in August 2020
Comply with EN817

FINISHES*

AA GN A2

A5

* AA = Chrome, GN = Silver Storm, A2 = Brushed Gold, A5 = Magnetic Grey

KEY FEATURES & BENEFITS

www.divaapp.com