Duplo Washbasin

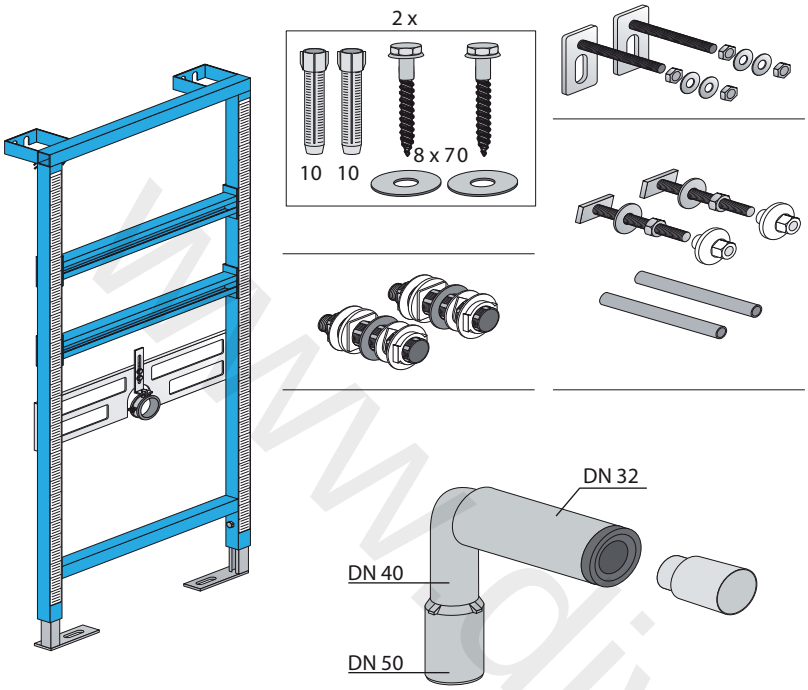

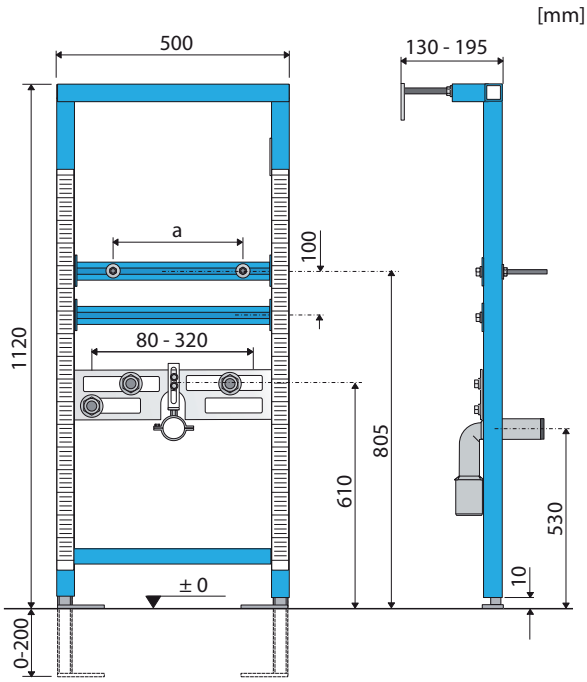

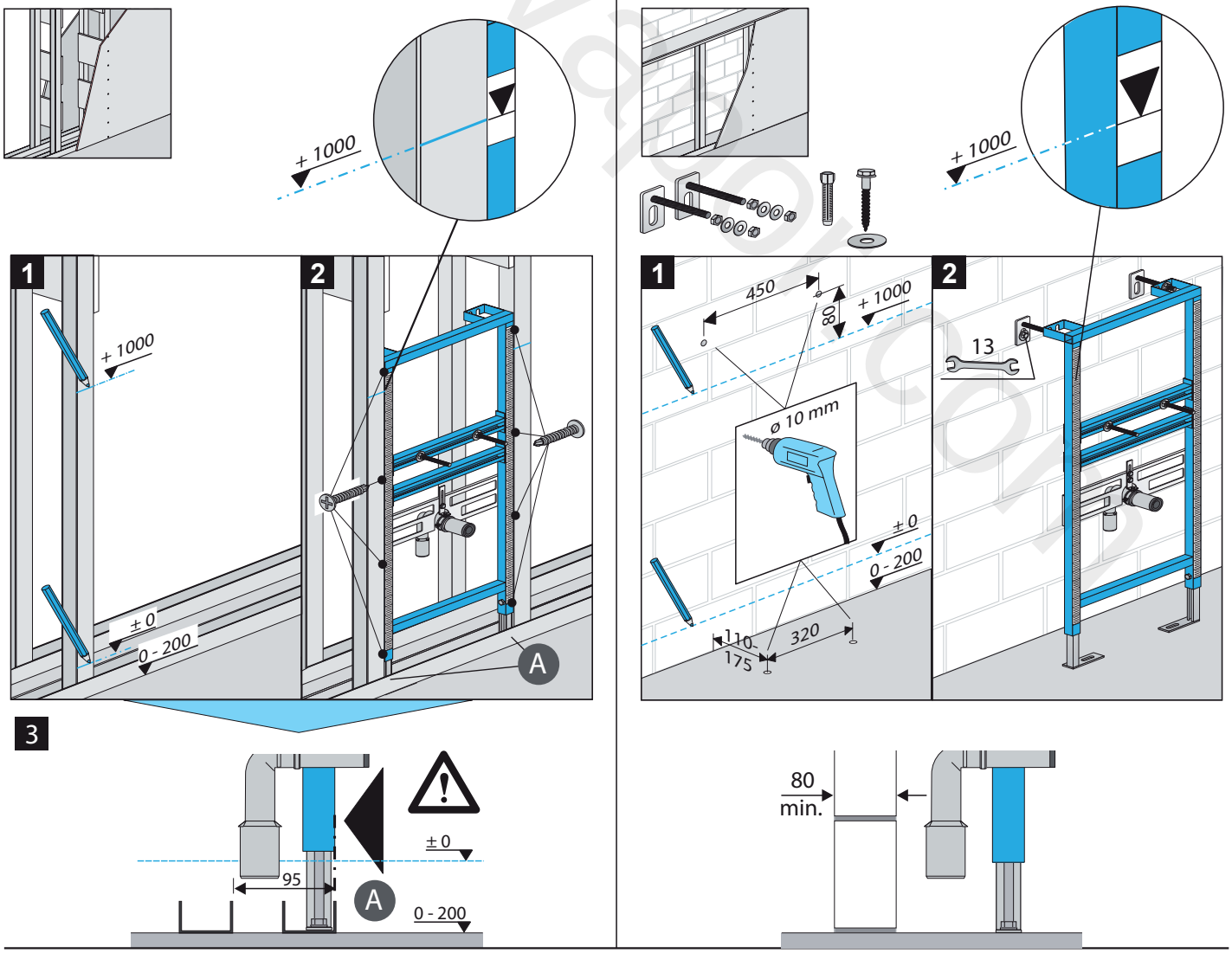

www.diyplus.com

4

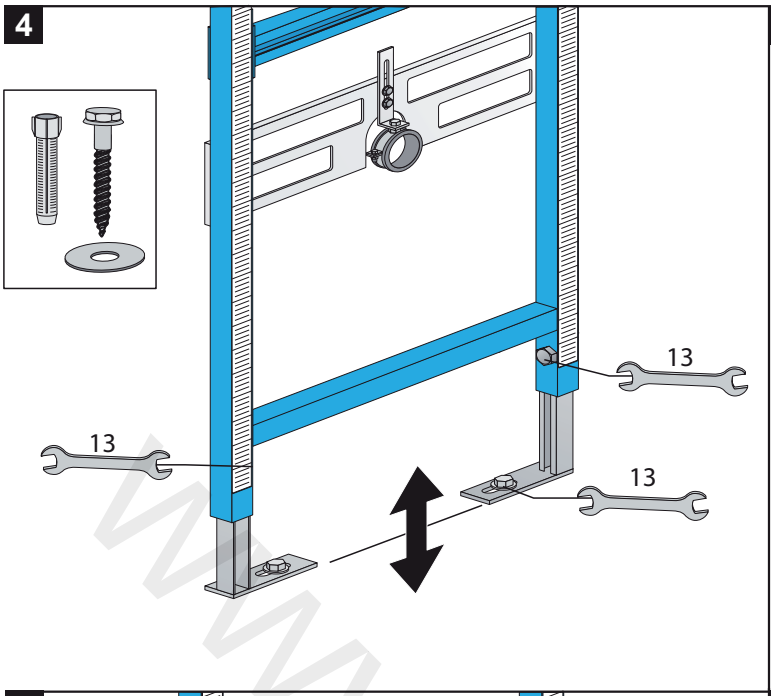

5

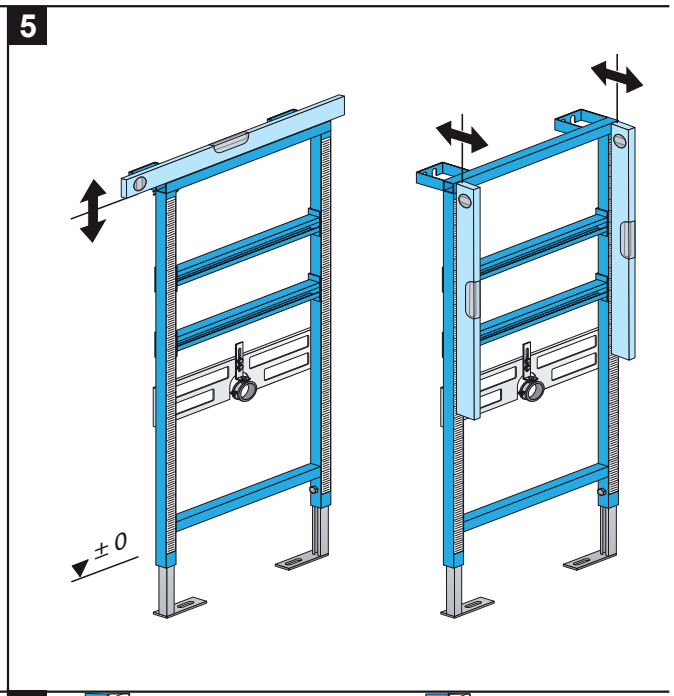

6

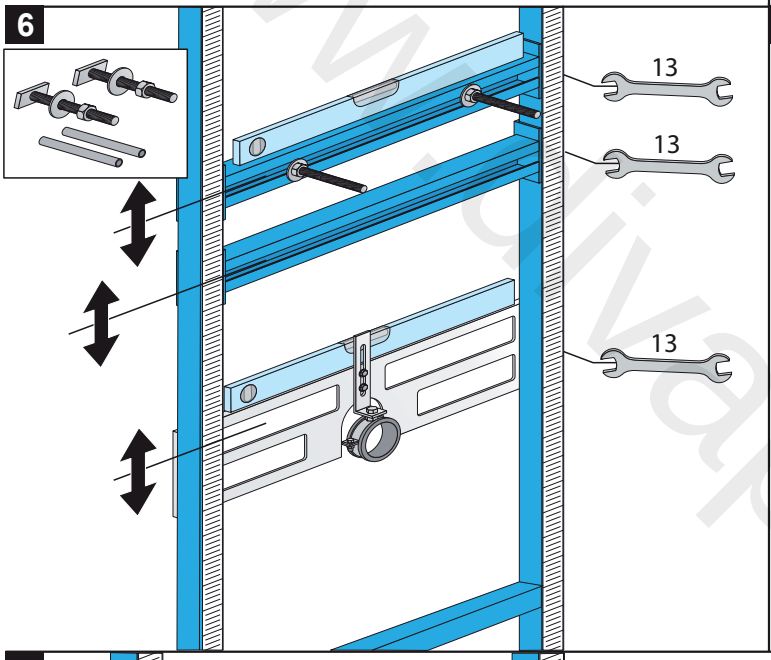

7

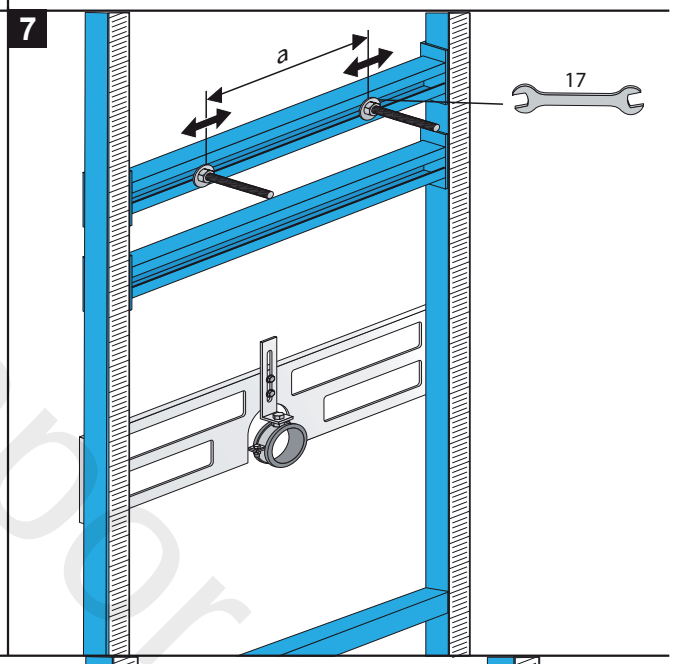

8

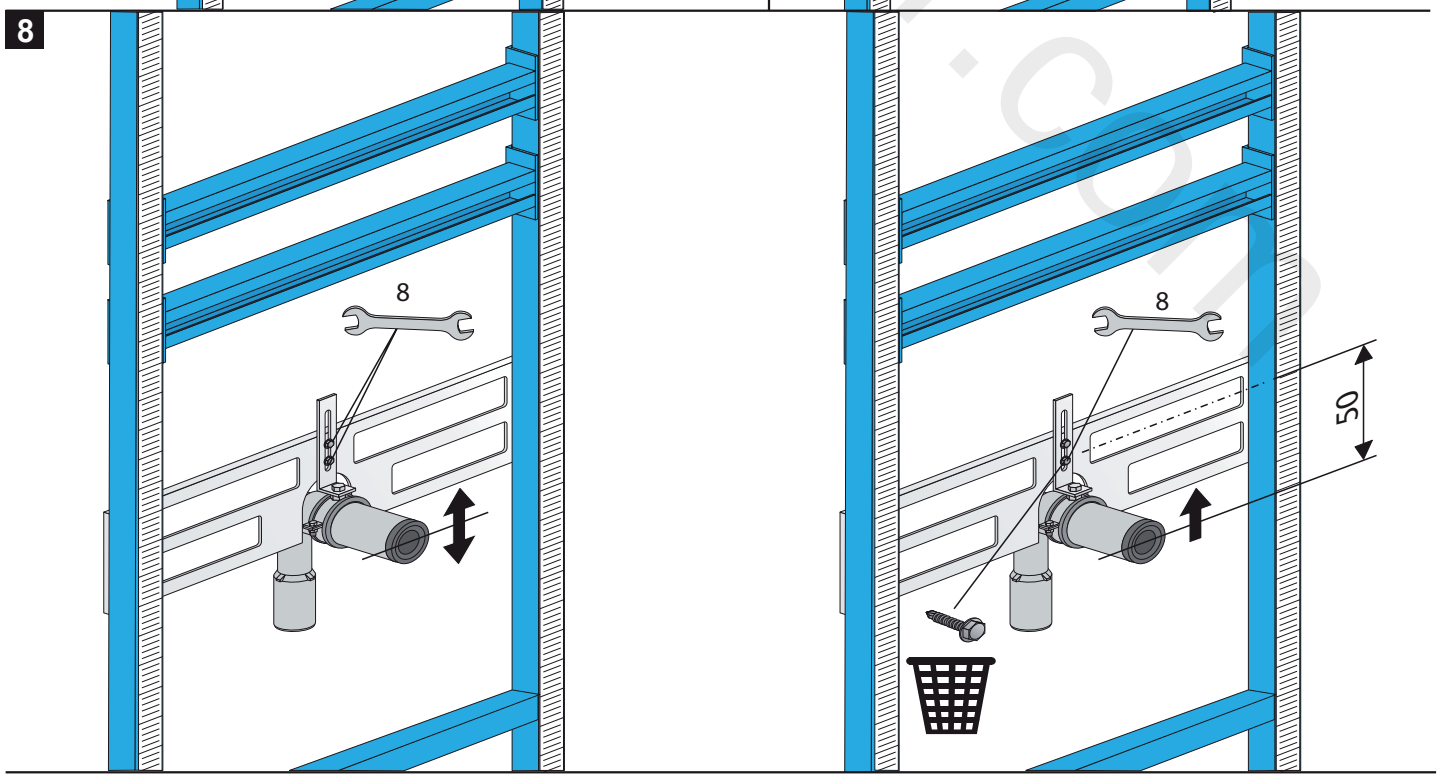

www.ivapor.com

8

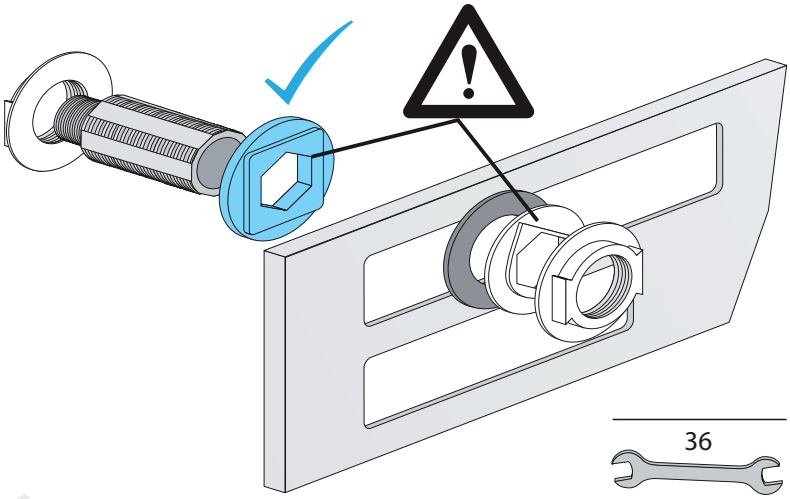

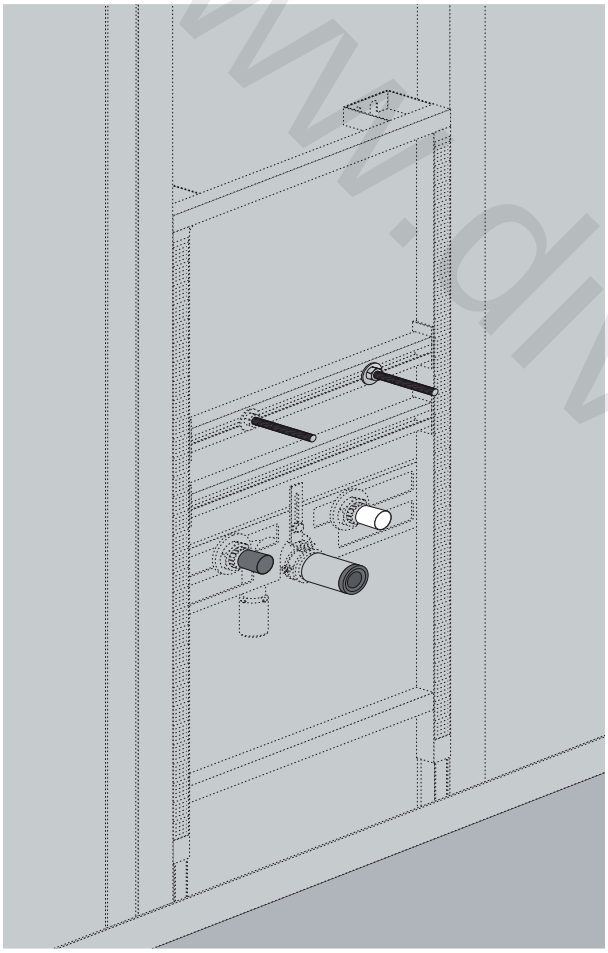

www.divapor.com