Article Number B9920

CONNECT BLUE
One-hole bidet mixer

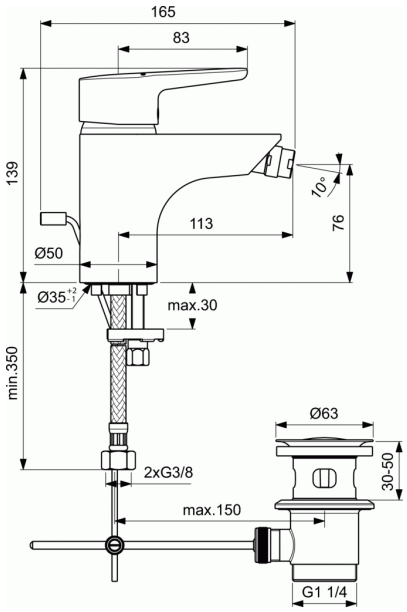

One-hole bidet mixer
Easy-fix fixation
Centering & Sealing Ring
Flexible hoses G3/8” for water supply system connection (PEX hoses - antibacterial)
40 mm IS cartridge with hot water limiter, with Click
Plastic pop-up waste
Metal handle with red and blue indicator
Cascade aerator M24x1; ball-joint connection
Comply with EN817

FINISHES*

AA

* AA = Chrome

KEY FEATURES & BENEFITS

www.divapor.com