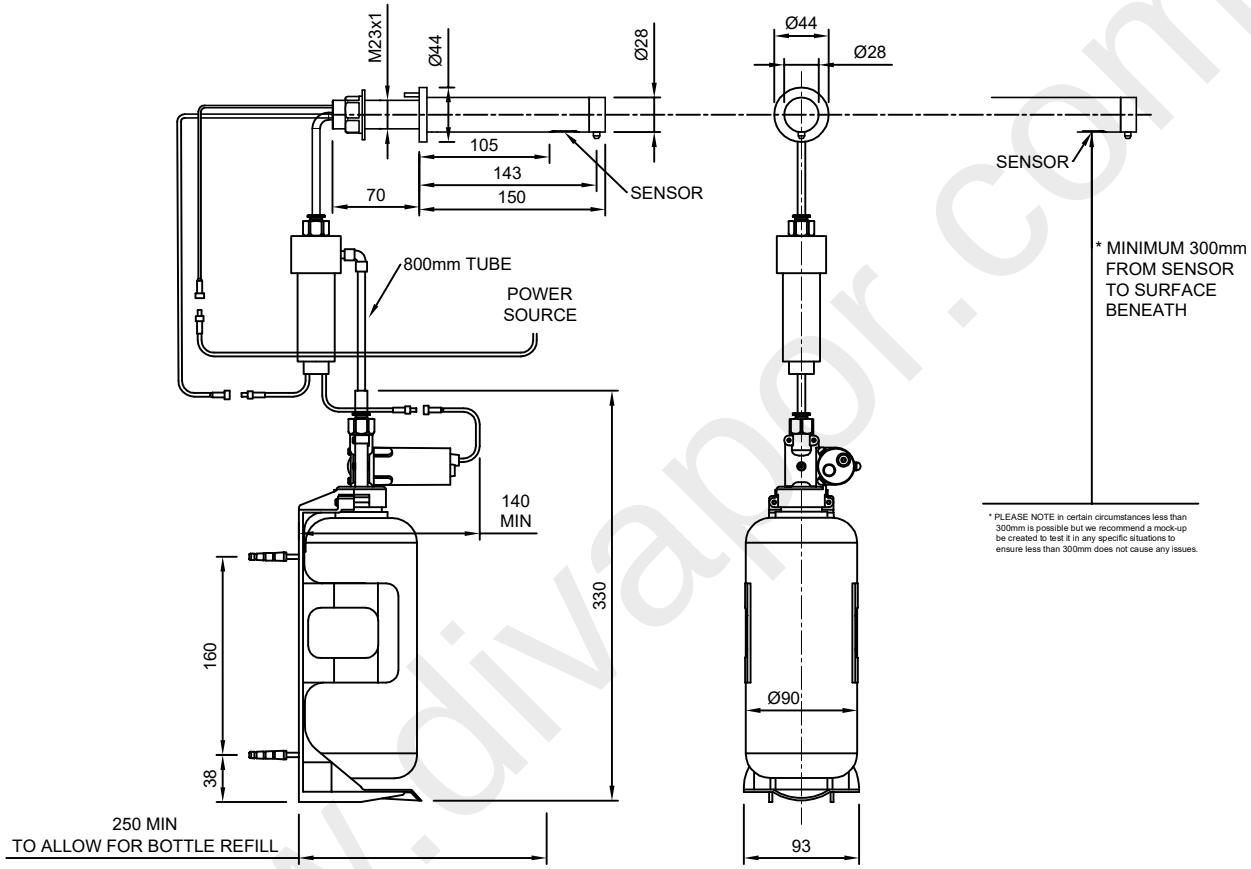

DOLPHIN SOLUTIONS LIMITED
DOLPHIN ELEMENTS
PANEL MOUNTED INFRARED FOAMING SOAP DISPENSER
BCL632F

DOLPHIN

www.divapor.com