Chatsworth Classic Bath Showers
Wall Mounted With Over Head Shower

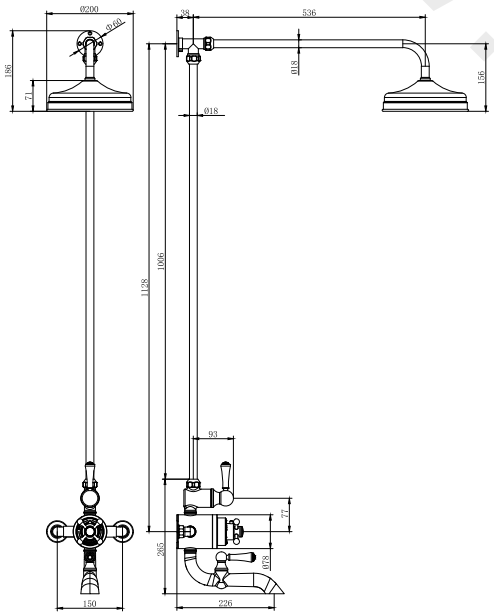

Fitting Instructions

Please follow them carefully and
leave this manual with end user

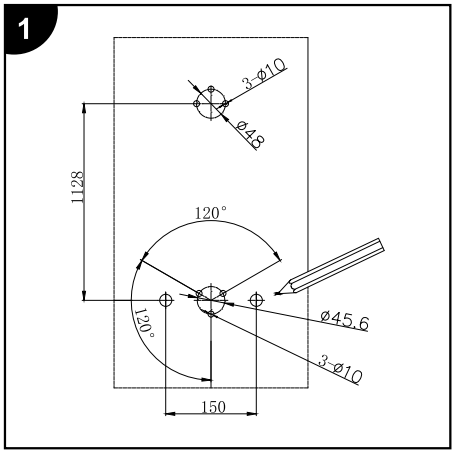

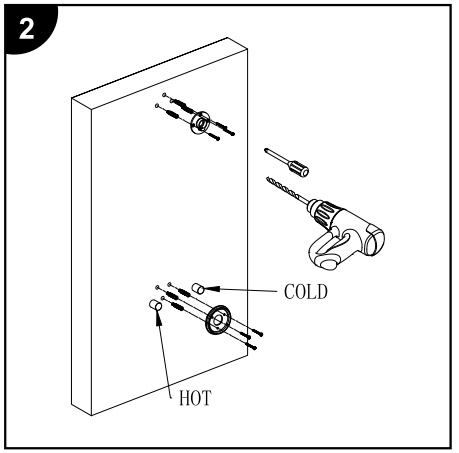

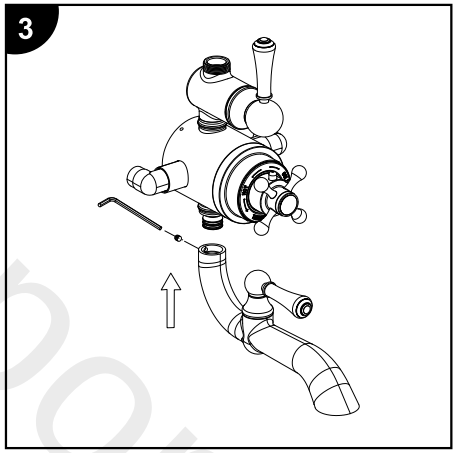

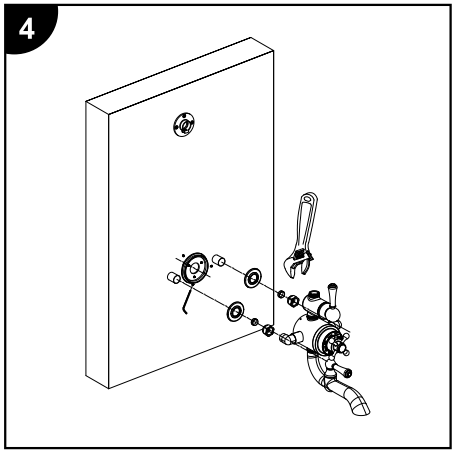

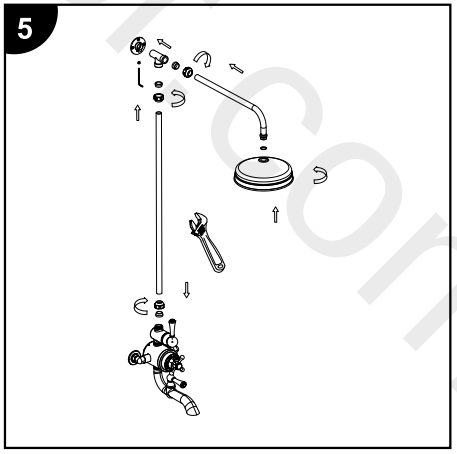

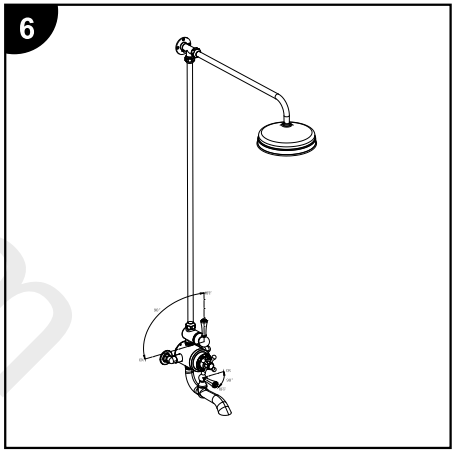

www.divaporcom