LEFROY BROOKS
IBROC HOUSE ESSEX ROAD
HODDESDON HERTS EN11 OQS UK
T: +44 (0)1992 708 316 F: +44 (0)1992 708 317

FM1205

LA CHAPELLE FLARED SPOUT BASIN MIXER
WITH METAL TORPILLE AND POP-UP WASTE

DIMENSIONAL DATA SHEET

DATE: 02/01/2019

REVISION: B

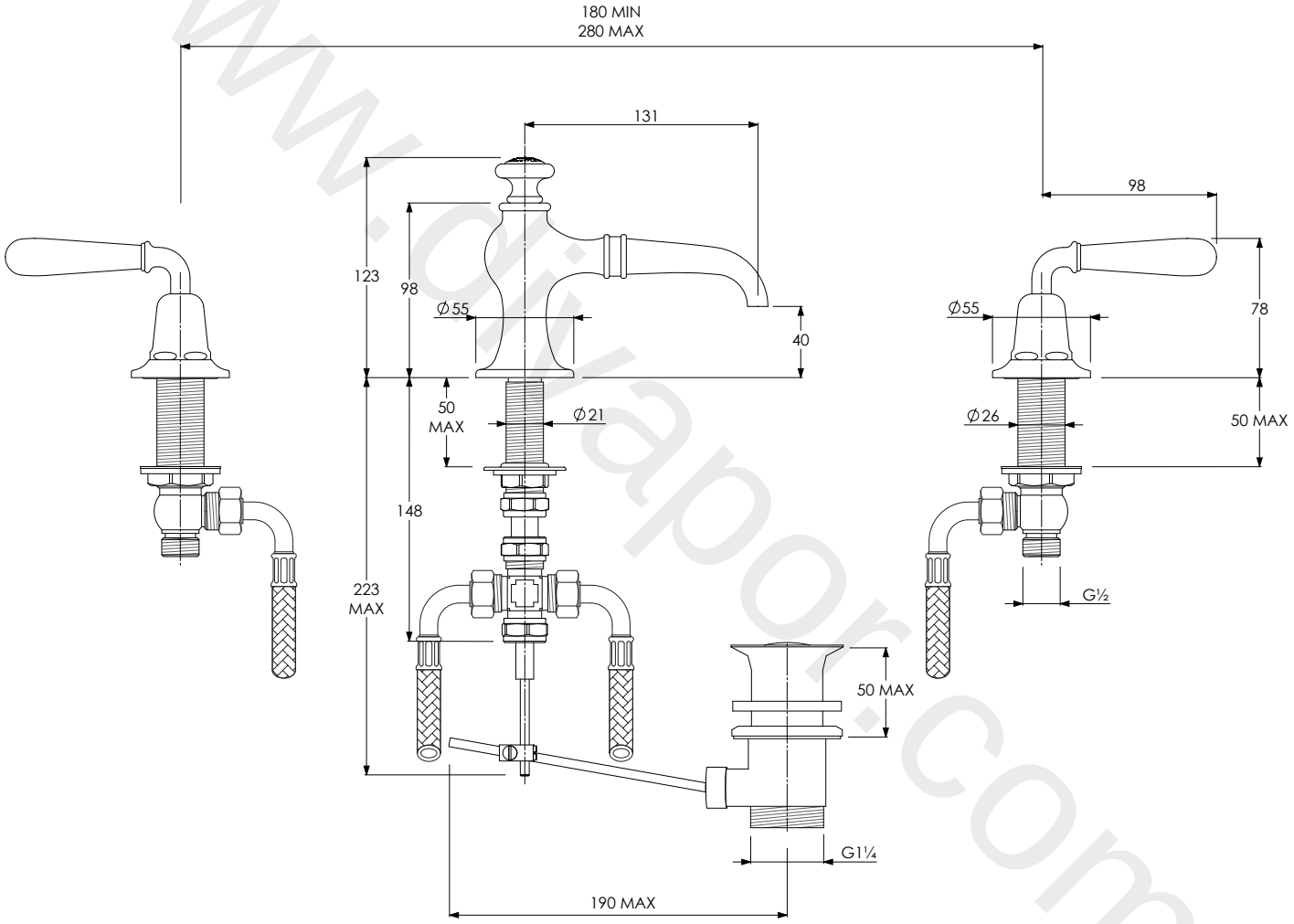

COPYRIGHT © LBIP LTD. ALL RIGHTS RESERVED

www.divapoor.com

DIMENSIONS IN MILLIMETRES

WHILST EVERY EFFORT IS MADE TO ENSURE THE ACCURACY OF THESE DATA SHEETS THEY ARE SUBJECT TO CHANGE WITHOUT NOTICE AS PART OF THE COMPANY'S PRODUCT DEVELOPMENT PROCESS