QAS00
Quadrik
Single hole lavatory faucet without drain

*Sizes, models and finishes may differ from those presented.

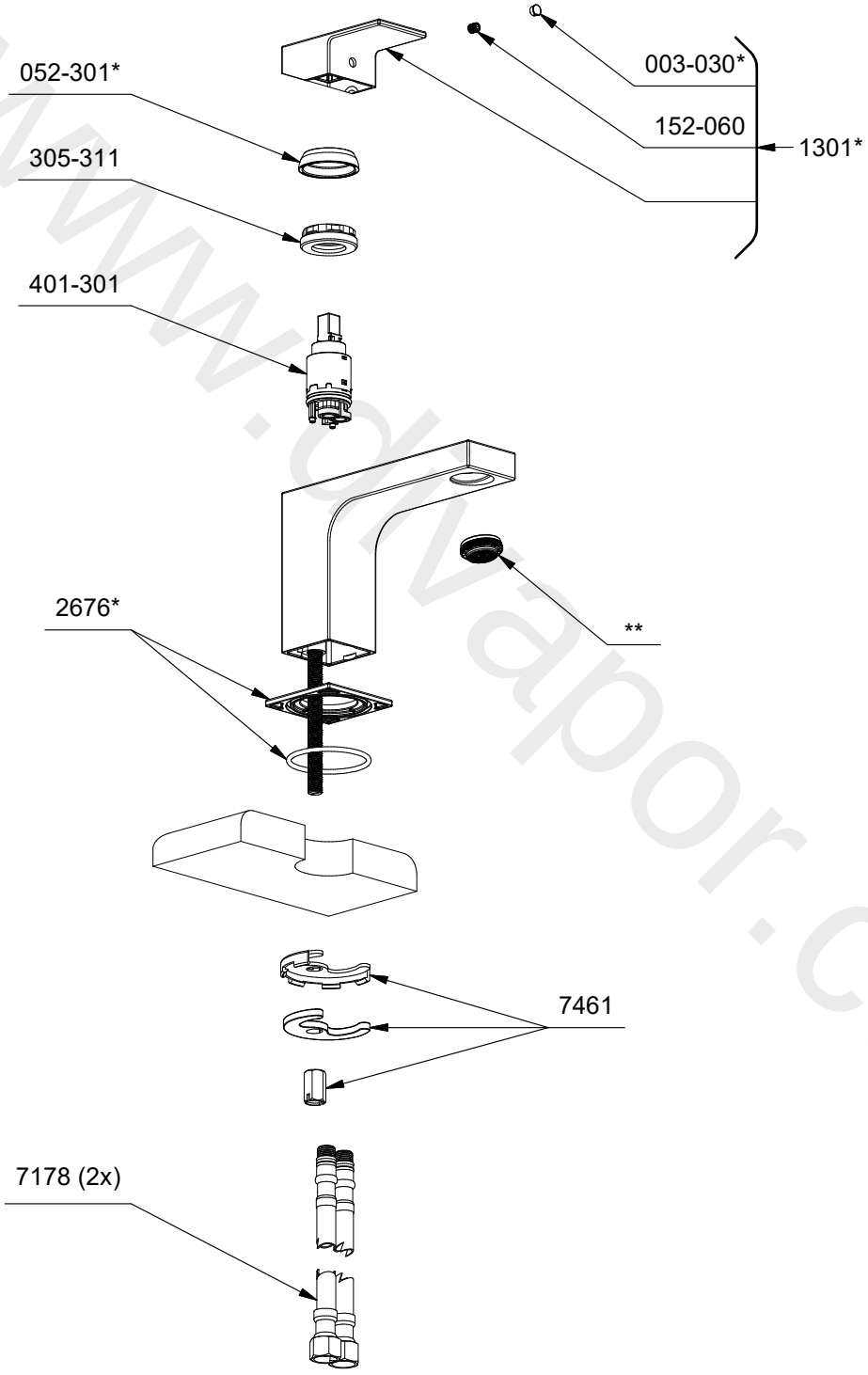

***Finish determined by Suffix**

Finish	Description
C	Chrome
BK	Black

****Aerator Kit (Include tool) :**

S6-681-12 (1.2gpm / 4.6l/min)
S6-681-10 (1.0gpm / 3.8l/min)
S6-681-05 (0.5gpm / 1.9l/min)

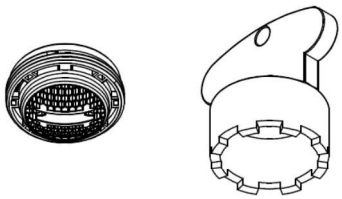

TOOL :

505-025 (Allen key 2.5mm)

www.dkvapor.com