LEFROY BROOKS
IBROC HOUSE ESSEX ROAD
HODDESDON HERTS EN11 OQS UK
T: +44 (0)1992 708 316 F: +44 (0)1992 708 317

WL1166

CLASSIC WALL MOUNTED BATH SHOWER MIXER WITH WHITE LEVERS

DIMENSIONAL DATA SHEET

DATE: 01/04/19

REVISION: D

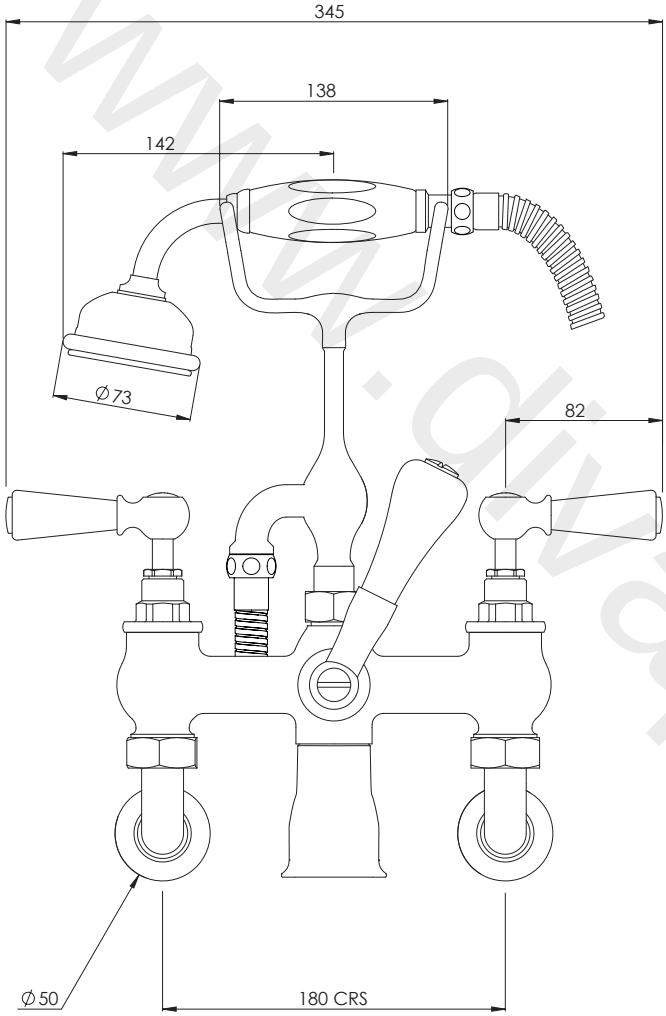

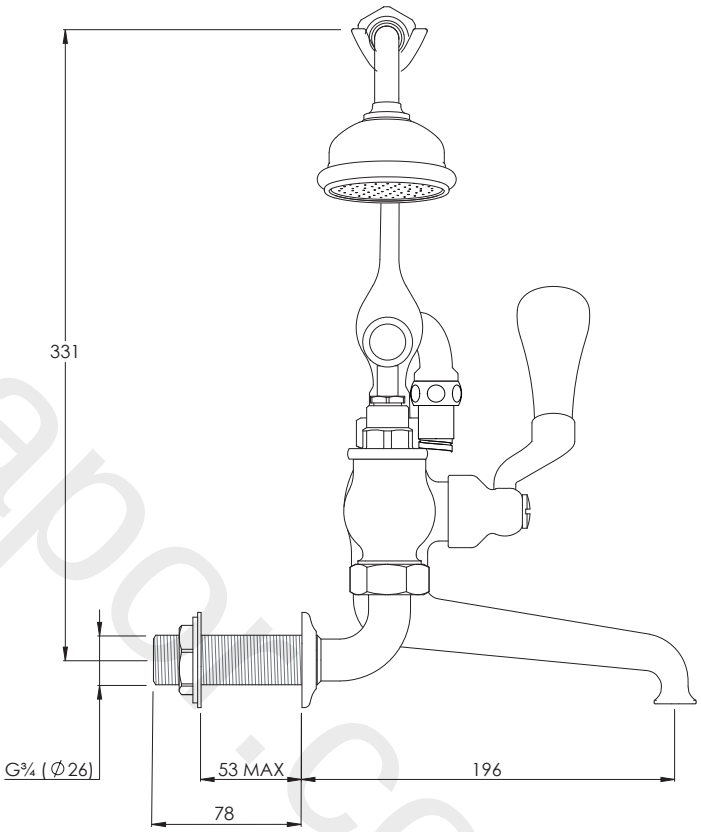

DIMENSIONS IN MILLIMETRES

COPYRIGHT © LBIP LTD. ALL RIGHTS RESERVED

WHILST EVERY EFFORT IS MADE TO ENSURE THE ACCURACY OF THESE DATA SHEETS THEY ARE SUBJECT TO CHANGE WITHOUT NOTICE AS PART OF THE COMPANY'S PRODUCT DEVELOPMENT PROCESS